Owners & Installation Manual

for the

Sheridan, Mountainair, Pine Valley and Old Forge Ceiling Fan Family

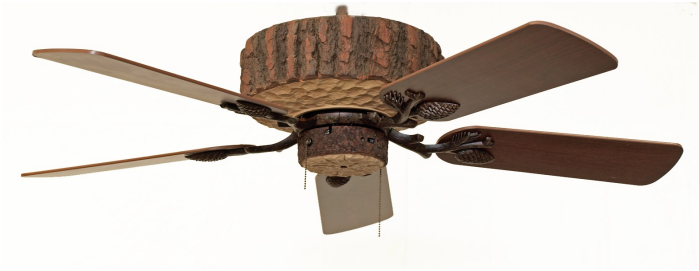

Part of the Kiva Lighting Family

Custom Lighting and Fans Since 1992

1312 12th St NW Albuquerque, NM 87104
(505) 342 - 9044

Your Western, Rustic and Specialty Ceiling Fan Source

READ AND SAVE THESE INSTRUCTIONS

Over 90% of ceiling fan problems are the result of improper installation. Ceiling fans are complicated, sensitive and precision products that must be treated with respect and care during installation. If there are any problems, please see the troubleshooting section at the end of this manual.

Before beginning installation of your new *Copper Canyon* ceiling fan, please read and follow these safety instructions. If you are not familiar with national/local electrical codes and basic electrical procedures, we recommend that you have a qualified electrician install your new ceiling fan. We are not responsible for any damage to your fan caused by improper installation.

Important Safety Considerations

- TURN OFF THE ELECTRICITY before starting fan installation. Determine which circuit your new fan will be using and remove the fuse or turn off the circuit breaker at the main panel.

- Make sure that all wiring conforms to national and local electrical codes. If you are in question, obtain a copy of the codes and wire the fan accordingly. Never leave bare wires uncovered and all wire connections should have wire nuts to cap all connections. *Plastic electrical tape is NOT recommended.*

- When working with electricity never take short cuts. Follow the code in every respect. Basic requirements for a ceiling fan installed with lights are 120 volts AC – 60Hz on a grounded circuit with a 15 amp breaker or fuse. Make sure that your electrical system and choice of location meet these requirements.

- If you plan to use an existing electrical location, check to make sure that the outlet box is NOT plastic, that it is securely attached to a wood ceiling joist and able to support at least 50 lbs of moving weight. If you have any questions regarding these requirements, outlet boxes and support systems for ceiling fans you may get more information at your local Hardware store or Home center. In most cases, your dealer will also have all the necessary knowledge and products for the proper and safe installation of your ceiling fan.

- If the location where you plan to install your fan does not already have an electrical outlet, hire a licensed electrician to run the wiring and install an outlet box designed for a ceiling fan or any heavy fixture. The outlet box should be able to support a minimum moving weight of 50 lbs. and be marked “acceptable for fan support”.

- The fan should be located in a spot that has a minimum of 30 inches between the wall and tip of the fan blade at any point in its rotation. There should be a minimum of 7 feet from the blade level to the floor to minimize any accidental contact with the fan.

- Attach fan blades <u>after</u> the fan body has been properly mounted to the ceiling.

- Lubrication will not be necessary in your new ceiling fan. The ball bearings have been greased and permanently sealed at the factory so that further attention will not be necessary.

- Every effort has been made to provide you with proper instructions for the safe installation of this ceiling fan. You could, however, encounter situations or problems not covered in the manual. Should this occur, please refer to an electrical wiring handbook or hire a qualified electrician to install your fan.

WARNING

To reduce the risk of fire, electrical shock and personal injury – mount this fan to an outlet box marked "acceptable for fan support" using the mounting screws provided with the outlet box only. To reduce the risk of personal injury, take care to not bend the blade arms or blades. Be careful not to insert foreign objects into rotating fan blades.

The important safeguards and instructions appearing in this manual are not meant to cover all possible conditions and situations that may occur. It must be understood that common sense, caution and careful attention to detail are factors which cannot be built into this product. These factors must be supplied by the person or persons installing, caring for and operating the unit.

Look for: 

To find safety tips and ideas for installation.

These instructions are designed for a number of similar, but different, ceiling fans. As you proceed, some steps may or may not apply to the fan you purchased. Compare each step or optional procedure to your fan and proceed accordingly.

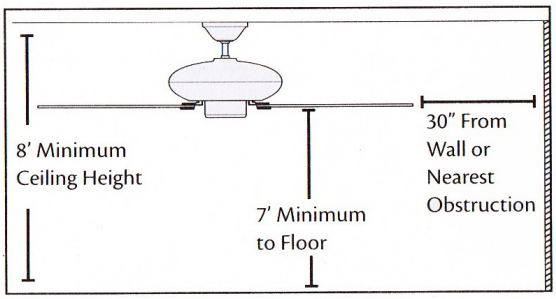

Please follow these Minimum fan mounting Guidelines. Fans with light kits will require an additional 8-12 inches of ceiling height

Have you turned OFF the ELECTRICITY to the Fan?

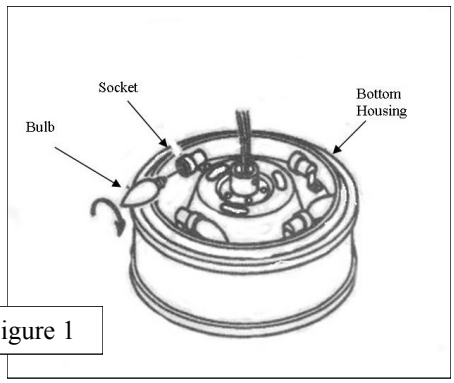

Figure 1

STEP 1: Install the included 4-25W light bulbs in the top of the fan *(figure 1)*
Do not use any size larger than 25 Watts or the fan will overheat.

STEP 2: Attach the Support Assembly

- Loosen the set screws (2) in the support rod coupler located on the top center of the motor housing *(figure 2)* until the inside channel is clear.
- Note: If a longer down rod is being used, transfer the hanging ball to the new down rod and tighten the screws and pin securely
- Remove and save the hair pin clip and clevis pin from the coupler.
- Place the ceiling canopy decorative strip coupling cover onto support rod. Slide the cover onto support rod. *(figure 2)*
- Thread the support rod into the support rod coupler until the clevis pin can be inserted through the hole in both the rod and coupler. DO NOT TIGHTEN PAST THIS POINT OR YOU WILL CUT THE WIRES AND VOID THE WARRANTY.
- Insert the clevis pin through the hole in the support rod coupler and support rod; tighten firmly.
- Tighten the two set screws in the coupler; tighten firmly so the pipe will not twist or come loose.

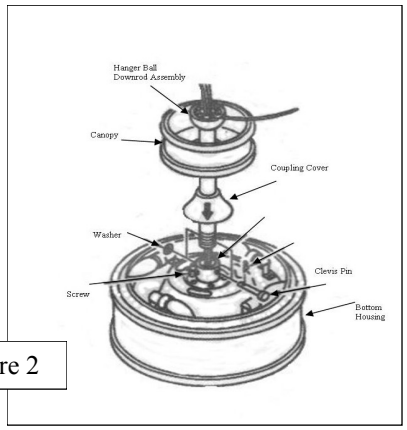

Figure 2

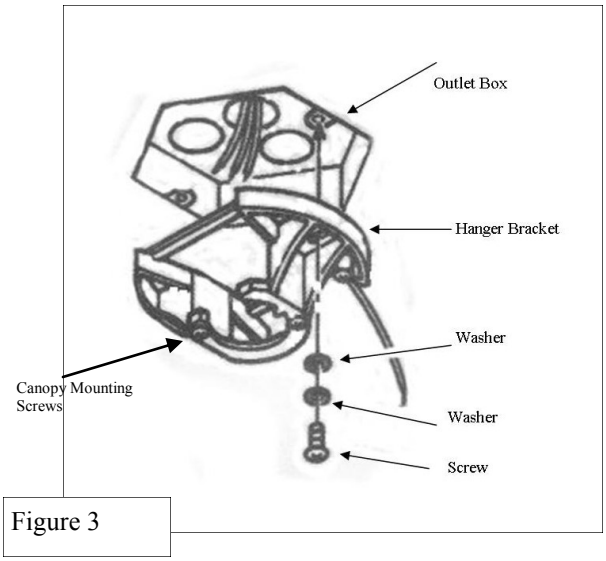

Figure 3

STEP 3: Attach the Mounting Bracket

- Loosen the 2 small canopy mounting screws on the downside face of the hanger bracket. Back them out about halfway, this will allow for easier installation of the ceiling canopy later. *(figure 3)*
- Install the hanger bracket on the electrical junction box in the ceiling using 2 machine screws, 2 washers and 2 lock washers. *(figure 3)* The mounting bracket has slotted holes to enable it to move sideways for a proper alignment. Make sure the mounting bracket is centered over the electrical junction box and that it is securely attached. *(figure 3)*

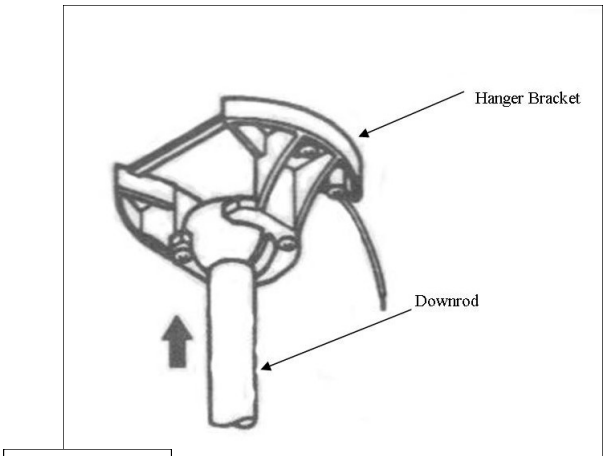

Figure 4

STEP 4: Hanging the Fan Body

- Notice the half ball on the end of the support rod is grooved down one side. *(figure 4)* This keyway fits over the small keyway pin on the inside of the mounting bracket and keeps the ceiling fan from spinning on the mounting bracket.
- Using a ladder, lift the fan and place the half ball in the center of the mounting bracket with keyway pin inserted in the keyway of the ball.
- Turn the fan left and right slightly to make sure it is seated on the bracket with the keyway pin in the keyway. Trim the lead wires, leaving about 6 inches of each wire extending from the support rod.

When using an optional longer down rod, be sure to attach the half ball properly with the clevis pin through the rod and the set screw tightened down. These parts have to be removed from the 4-5” rod included with the fan.

STEP 5: Making the Electrical Connections

In order to operate your ceiling fan with both pull chain(s) and switches mounted on your fan – follow the instructions below. If using wall switches or a remote control, please refer to the wiring diagrams at the back of this manual.

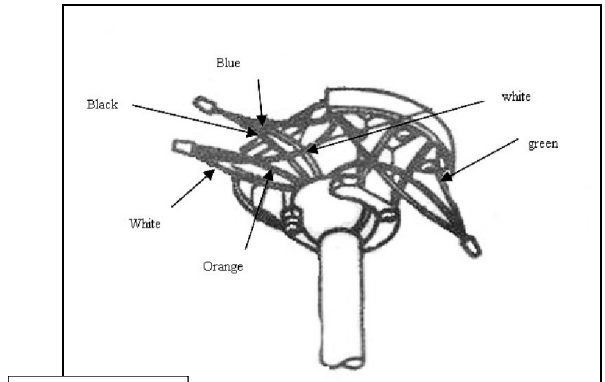

Figure 5

- Attach the GREEN wire (connected to the half ball) to the GROUND wire in the junction box. The GROUND wire is usually a bare copper wire without plastic insulation. It could also be covered in green plastic insulation or attached to the metal junction box in the ceiling. *(figure 5)*
- Attach the BLACK wire and the BLUE wire from the ceiling fan to the BLACK wire in the junction box.
  Attach the WHITE wire and the ORANGE wire from the fan to the WHITE wire in the junction box.
- Fold the connected wires *(figure 5)* and push them up inside the electrical junction box with the black and blue wires to one side and white and orange wires to the other side.
- Make sure the wire nuts do not come loose during this operation and that the wires are still tightly bound together inside the wire nut.
- Note: a common problem is when one of the wires pulls out of the wire nut when pushing the wires into the box.

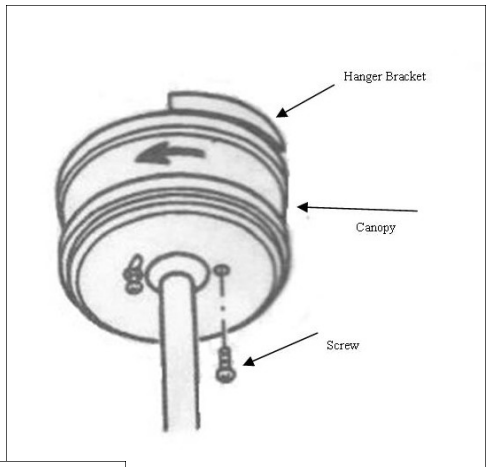

Figure 6

STEP 6: Attaching the Ceiling Canopy

- Slide the ceiling canopy up into place over the ceiling mounting bracket. The canopy will vary in style based on the model purchased.
- The 2 screws on the mounting bracket face should slip through the keyhole slots in the canopy. *(figure 6) Tighten until snug but do not over tighten as this is a decorative part only.*

STEP 7: Fan Blade & Fan Arm Assembly

Most fans are supplied with a reversible blade finish. Choose the blade finish that you prefer and attach as follows:

- Attach each fan blade to a blade arm with included screws. The arm style will vary and may include a star, horseshoe, squares or other medallion on some models. (see Figures 7)
- Screws should be tightened until very snug. DO NOT OVER TIGHTEN THESE SCREWS.
- Hold the blade arm with decorative side down and place the blade on top with the flat side of the blade facing down. Each screw is passed through the screw pad and blade and then screwed into the blade arm.

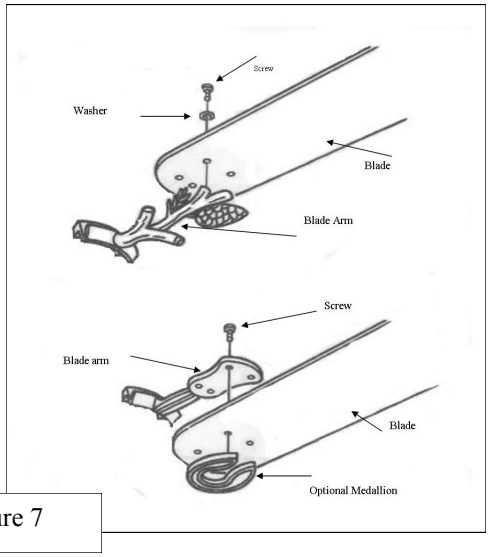

Figure 7

STEP 8: Fan Blade Assembly Installation

- Remove the large screws and rubber shipping block on the motor.
- Discard any rubber blocks attached to these screws. *These blocks are placed by the factory to stabilize the motor during shipping.*
- Attach each blade arm to the motor face using the 2 screws included in the parts kit. Medallions styles will vary. *(figure 8)*
- Take special care <u>not to bend any of the blade arms</u> during this installation; this will cause the fan to wobble while running.

Try mounting the blades on opposing sides of the motor face. This will help keep the fan level during the blade installation.

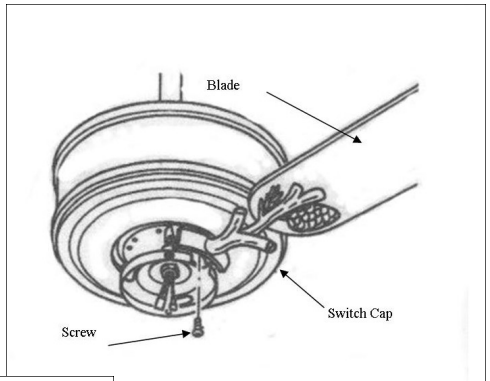

Figure 8

STEP 9: Electrical Switch Housing Installation

- Back off (or loosen) the screws on the electrical housing mount plate attached to the motor shaft. *(figure 9)*
- A color coded wire connector (female) is located inside the electrical switch housing. *(figure 9)*
- A male connector extends from the mounting plate.
- Align the colors on each connector and push them securely together. It is a very tight connection so make sure it is all the way pushed together or the fan will not work properly.
- The connectors are also notched and will connect only when the colors are aligned. Connect the single wire from the fan to the single plug in the switch housing unit.

(Step 9, continued next page)

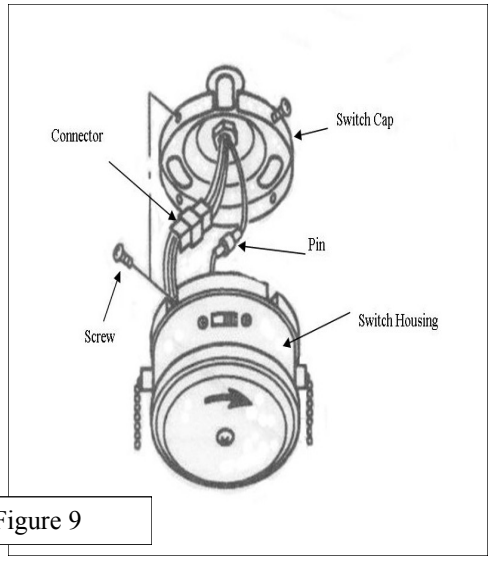

Figure 9

- The switch housing has 3 slotted holes around the top.
- Align these holes with the 3 screws on the mounting plate.
- Push the switch housing up and rotate to the right so the screws are at the far left of the horizontal slot. Tighten each screw.

STEP 10: Attaching the Pull Chain (if used)

- Attach the decorative pull chain to the switch housing and adjust the reverse switch to select. *(figure 10)*

STEP 11: Final Checks

- Check all safety pins.
- Check screws and connections; make sure they are properly placed and tight.
- Check blade clearance and rotation.
- Be sure fan is tight and secure on the ceiling

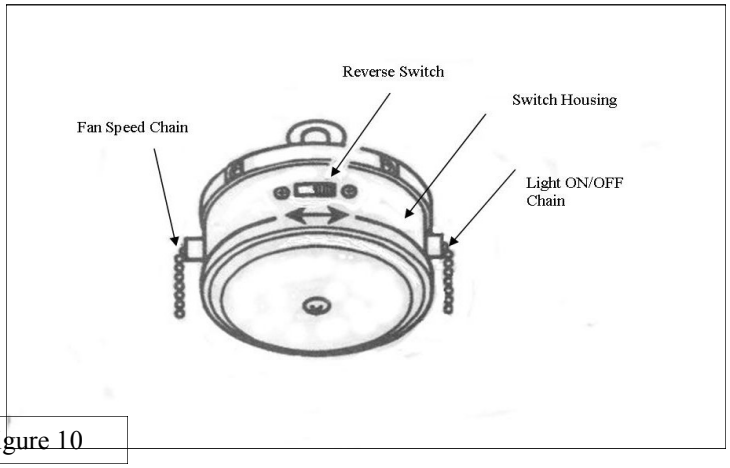

Figure 10

Troubleshooting Tips

Over 90% of ceiling fan problems are the direct result of improper installation. Ceiling fans are complicated, sensitive and precision products that must be treated with respect and care during installation.

Fan and Light Do Not Turn On:

1. Make sure you have power to the fan at the electrical box
2. Make sure the fan pull chain is on an actual speed and not the off position.
3. Check that the white multi-pin connector in the bottom fan switch cup is pushed together completely.
4. Does the fan turn easily by hand and is not locked up or dragging?

Fan Hums, Turns Slowly or Requires a Push to Start Moving:

1. Make sure the fan speed pull chain is on high when using a wall speed control.
2. If the fan will not start on its own but turns after manually pushing it, then the starter capacitor needs to be replaced. Please call us at (505) 342 9044 for a replacement part.
3. Is the wall switch working properly? Try bypassing it (experienced electricians only) and see if that fixes the problem.

Fan Wobbles when Turning:

1. Is the fan secure to the ceiling and are all the blades and blade arm screws tight?
2. Use the included balance kit to try balancing the fan. YouTube has many good video instructions on how to balance fan blades if you are not familiar with the technique.
3. Did any of the blade arms get bent when installing the fan?
   If these procedures do not fix the problem, please contact us for replacement parts or advice.

Fan Makes a Clicking Sound When Turning:

1. Is the fan wobbling? That will cause the metal ball hanger in the ceiling canopy to click when. Balance the fan to fix the problem.
2. Is the pull chain hitting the light kit causing noise?
3. Turn off the fan and try turning the blades slowly by hand to determine where the sound is coming from and please call us with any questions at (505) 342 9044

Upper or Lower Lights are Not Working:

1. Make sure wire connections at the top of the fan and the pin connectors (2) in the switch housing at the bottom of the fan are connected.
2. Is the pull chain pulled and in the on position for the top light?
3. Are there bulbs in the top light sockets?

Warranty Information

This fan has a lifetime warranty on the motor for the original purchaser and a 1 year unconditional warranty on all other parts. Electrical parts other than the motor are covered for 1 year only. The warranty covers replacement parts only and we will send you the parts or fan based on the circumstances. The warranty is void if an indoor fan is used outdoors or physically damaged in any way. Any labor, loss of use or other costs are not covered under this warranty. Please contact us at (800) 275 5482 if you need assistance with this fan.

Wiring Information

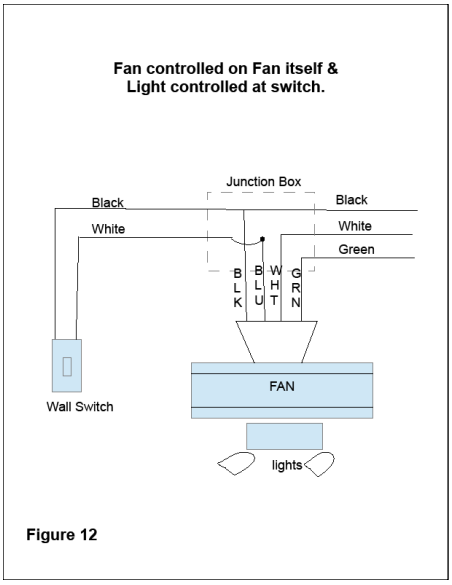

Figure 12:
Shows the wiring used to control the fan with the pull chain on the electrical switch housing plus an optional light fixture with a wall switch.

Figure 13:
Shows the wiring used to control the fan and optional light fixture with separate wall switches.

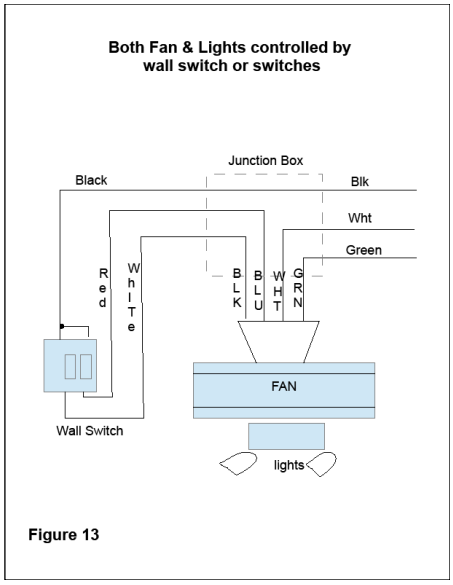

NOTE: If you choose to use a wall switch, select one that has been designed for use with ceiling fans. Light dimmers will damage the fan if used as a speed control. Your dealer or local home center carries a number of different types of wall switches that have been designed and tested for use with our products.

Fan settings required for use with a Wall Switch:

- If you choose to control the **motor** of your fan from a on/off only wall switch, remember that the wall switch will only turn your fan ON or OFF. The speed can only be adjusted on the fan itself.
- If you choose to control the **speeds** of your ceiling fan from a wall switch, you must set your fan on HIGH and leave it in that setting.

Final Instructions & Maintenance:

Your new Copper Canyon *ceiling fan*
is now ready for use. Typical fan breakdown is shown below.

Reset your circuit breaker and restore electricity.

Operation Instructions:

- The pull chain, located on the switch housing (see figure 8), will control the speed of your fan.

When the fan is OFF – pull the chain once for HIGH, twice for MED and 3 times for LOW – pull the chain a 4th time and the fan turns off again. The optional remote controls do not use the pull chain switches or reverse switch.

Maintenance:

Your fan requires very little maintenance.

- Clean the housing with a damp, soft cloth (DO NOT use cleaning products or agents).

Clean the fan blades with a DRY soft cloth or duster; moisture may cause the blades to warp. If the fan starts wobbling, make sure the blades and fan are still tight and rebalance the blades if needed. It is normal to have to rebalance the fan blades after several years if the fan starts to wobble.

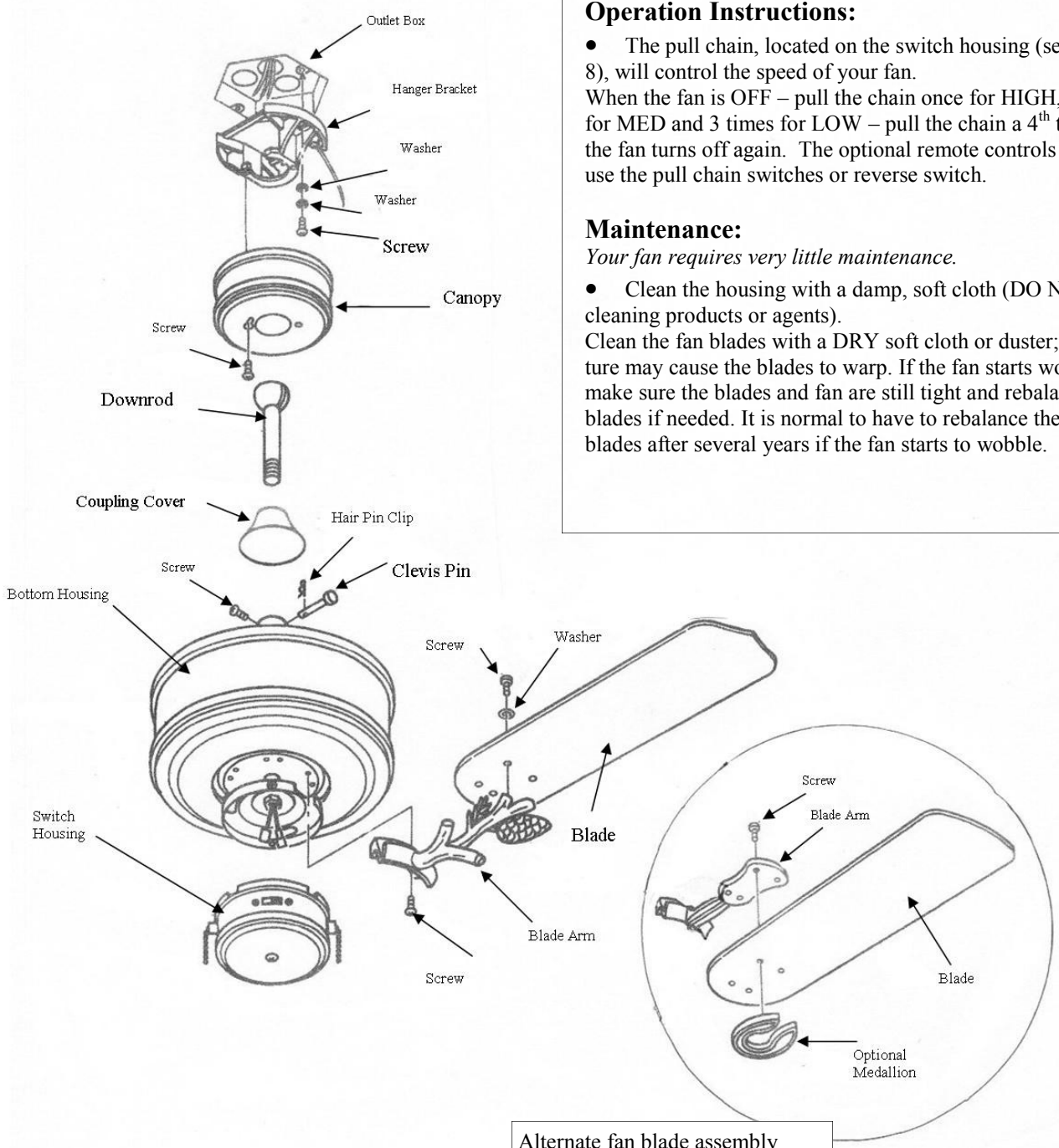

Alternate fan blade assembly

Remote Control Installation Instructions

RM807 Remote Control Module—If not already done, remove the capacitor and electrical components from the lower switch housing of the fan and replace with the relay module included with this kit. The pull chain switches and reverse switch can be left in but cut off the wires to make room for the module.

1. Preparing transmitters and receiver for installation

This unit has 16 different code combinations to prevent interference from other remote devices (ie. garage door remotes). Reset code if interference occurs.

A. Setting the code.

a. Remove battery covers. (Front plate on wall transmitter. Back plate on hand held transmitter)
b. Use a small screw driver or ball point pen to slide code switches up or down to your choice. (Using factory default settings is not recommended)
c. Set the code on both transmitters and the receiver to the same code.
d. Replace covers on the transmitters

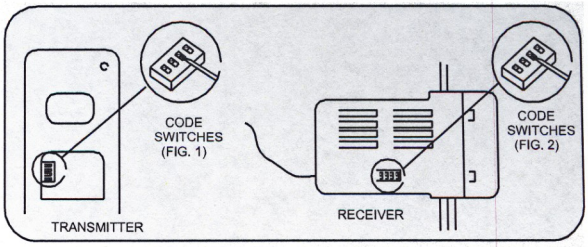

B. Install Batteries in transmitters

a. Install the provided battery into the wall transmitter
b. Align "+" and "-" signs as indicated, replace front plate with your color choice
c. Install 9 Volt battery into hand held transmitter (not included)
d. Replace battery cover.

2.INSTALLING RECEIVER IN CEILING FAN

A. Safety precautions:

WARNING: Risk of Injury or Electrocution!

Disconnect electrical power by removing fuse or switching off circuit breaker.
Electrical wiring must meet all local and national electrical code requirements.
It is recommended that this control be installed by a qualified, licensed electrician.

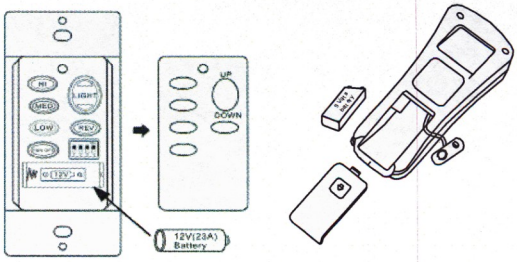

B. Installing receiver in fan (FIG. 4)

a. Disconnect electrical power from the circuit
b. Remove ceiling fan canopy cover.
c .Make wiring connections as follows, using the wire nuts supplied:
Connect BLACK control unit wire (AC IN L) to BLACK supply wire
Connect WHITE control unit wire (AC IN N) to WHITE supply wire
Connect BLACK control unit wire (TO MOTOR L) to BLACK fan wire
Connect WHITE control unit wire (TO MOTOR N) to WHITE fan wire
Connect BLUE control unit wire (FOR LIGHT DOWN) to blue fan light wire
Connect ORANGE control unit wire (FOR LIGHT UP) to Orange fan light wire
(If fan or supply wires are different colors: have unit installed by a qualified, licensed electrician)
e. Push all connected wires up into junction box.
f .Lay the black antenna wire on top of the receiver, and put the receiver in the mounting bracket.
g. Reinstall the canopy on the mounting bracket.

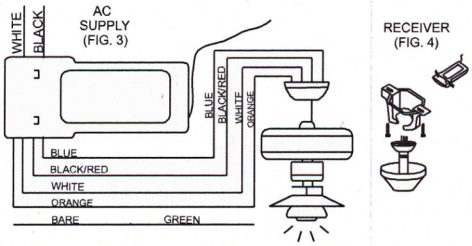

CAUTION: Do not use receiver in canopies where the mounting is not as shown in FIG. 4 above. Ceiling slope should not exceed 30 degrees.

C. Install switch receiver in the Switch Housing/Bottom Cup (FIG. 5)

a. Remove the Switch Housing/Bottom cap from the fan
b. If manual switches are present, cut wires from switches and remove existing internal components
c. Install new remote components inside the Switch Housing/Bottom cap
➔ d. Connect the matching plug and connect White wire (FOR LIGHT UP) to BLUE wire from fan.
e. Reinstall the Switch Housing onto the fan.

(FIG. 5)

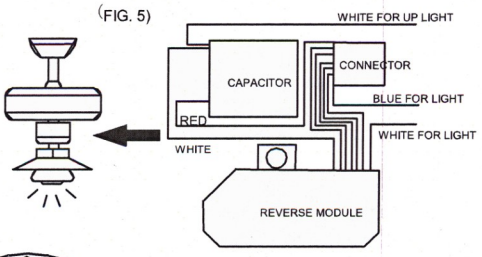

3.OPERATING TRANSMITTER:

A. Store the transmitter away from excess heat or humidity.

B. Fan operation buttons on the panel of the transmitter.

a. On/Speed buttons: "HI", "MED" and "LOW" turn fan on and/or set speed.
b. OFF button turns off fan.
c. REV key reverses direction of fan.
d. LIGHT key turns on/off Up or Down light when pressed on top or bottom of key
(Top of LIGHT key controls Up Light, bottom controls Down Light)
e. To dim lights: press and hold top or bottom of LIGHT key until desired brightness is set.
f. The light dimmer settings will be remembered by the remote when light is switched off.

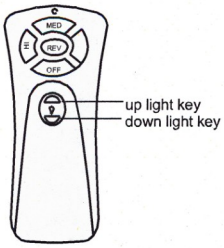

4.TROUBLE SHOOTING GUIDE

A. Fan/Lights fail to operate

a. Check batteries in transmitters (Red LED should light when buttons are pressed).
b. Power to fan/receiver? Check circuit breaker/fuse.
c. Receiver wired correctly? Check instructions and diagrams
d. Receiver and transmitters set to same code?

A. Remote fails when far from Fan

a. Reposition antenna wire

B. Light fails to operate

a. Light kit switch on?
b. Bulbs burned out/broken?
c. Light kit properly wired?

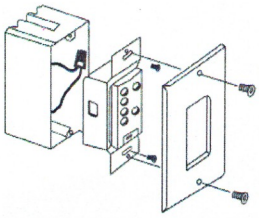

NOTICE!
Your ceiling fan and light kit assembly must meet the following requirements:

Electrical rating: 120V 60Hz 3.5A
MAX. motor amps: 1.0
MAX. light watts: 300-(Incandescent only)

CAUTION:
Ceiling Angle Should Not Exceed 30 Degrees.

Optional Wiring Diagrams for Fans with Up Lights

KV52 Fans

2 Wires coming from Wall Switch
Power controlled by wall switch – Fan and Lights controlled by Pull Chains

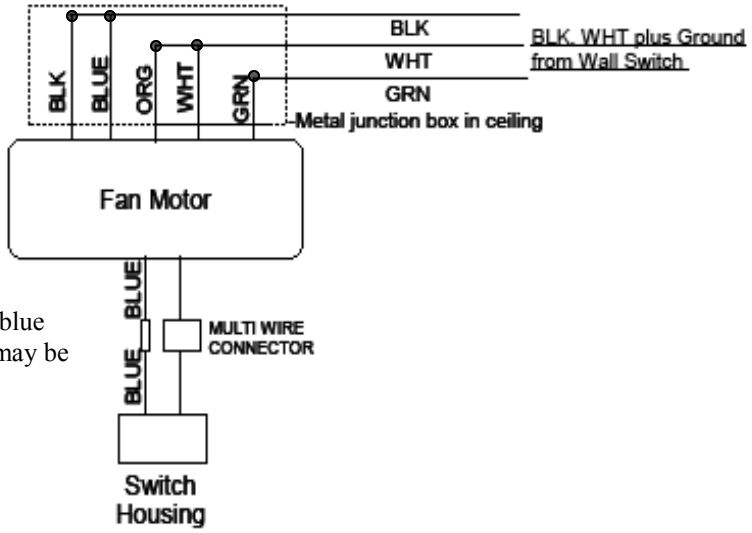

On some models the single blue wire in the switch housing may be white or vice versa

3 Wires coming from Wall Switch
Fan and Lights controlled by wall switches

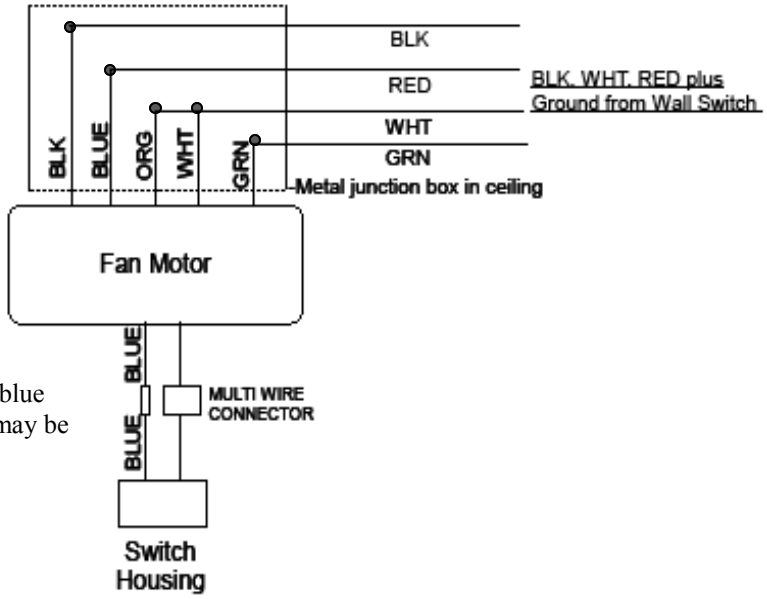

On some models the single blue wire in the switch housing may be white or vice versa

Optional Wiring Diagrams for Fans with Up Lights

KV52 Fans

Power at ceiling box with 2 wires to Wall Switch
Fan controlled by wall switch and Light(s) controlled by Pull Chain(s)

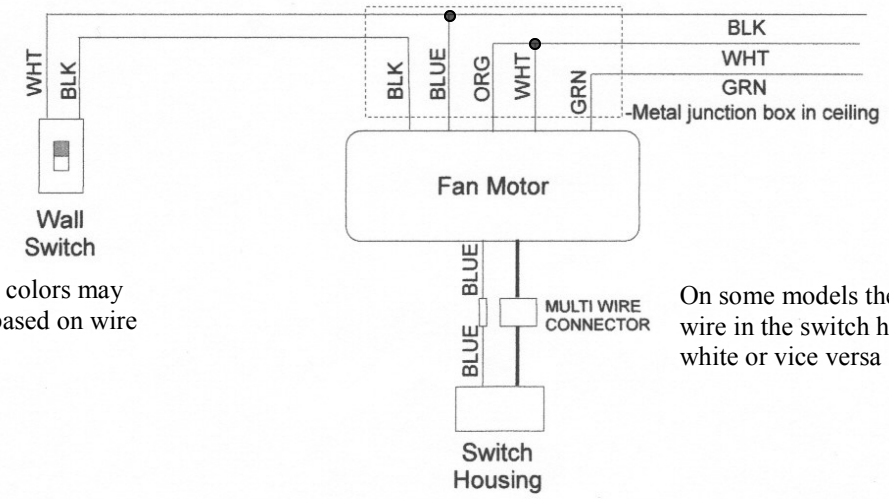

Wires colors may vary based on wire used.

On some models the single blue wire in the switch housing may be white or vice versa

Power at ceiling box with 2 wires to Wall Switch
Light(s) controlled by wall switch and Fan controlled by Pull Chain

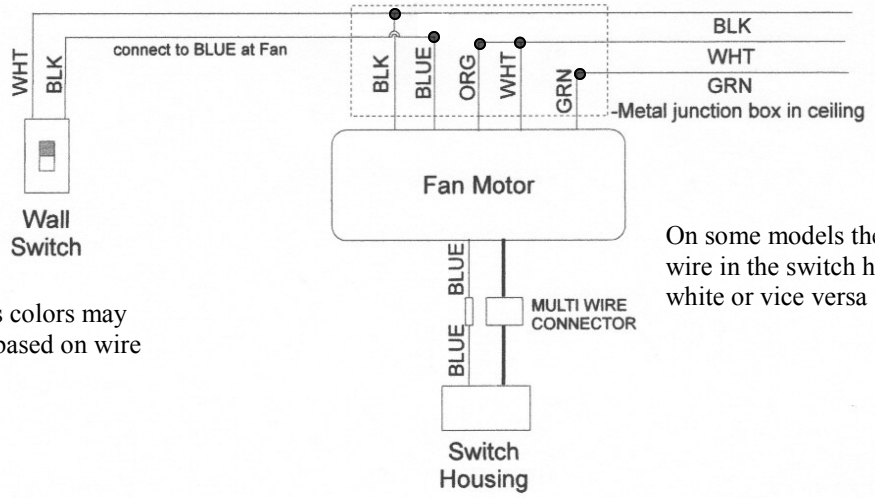

Wires colors may vary based on wire used.

On some models the single blue wire in the switch housing may be white or vice versa

Optional Wiring Diagrams for Fans with Up Lights

KV52 Fans

Power at ceiling box
Fan and Lights controlled by Wall Switches

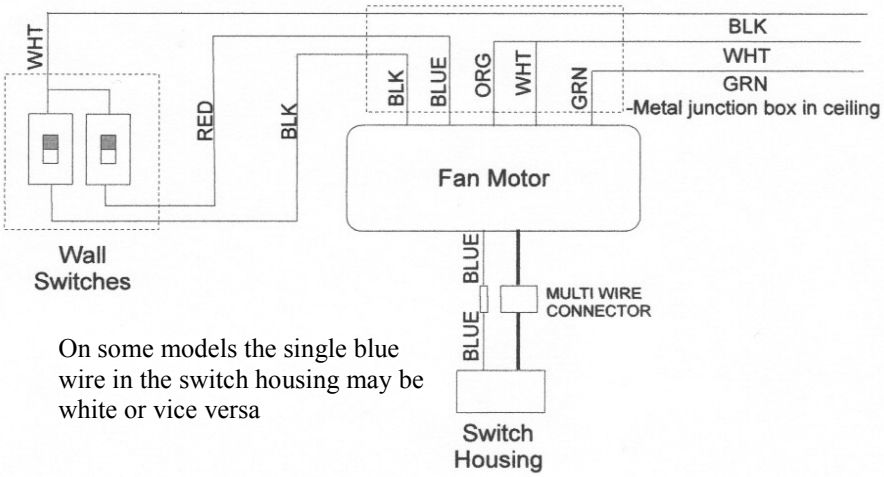

On some models the single blue wire in the switch housing may be white or vice versa

Power at ceiling box*
Fan, Light Kit and Up Lights all controlled separately by Wall Switches

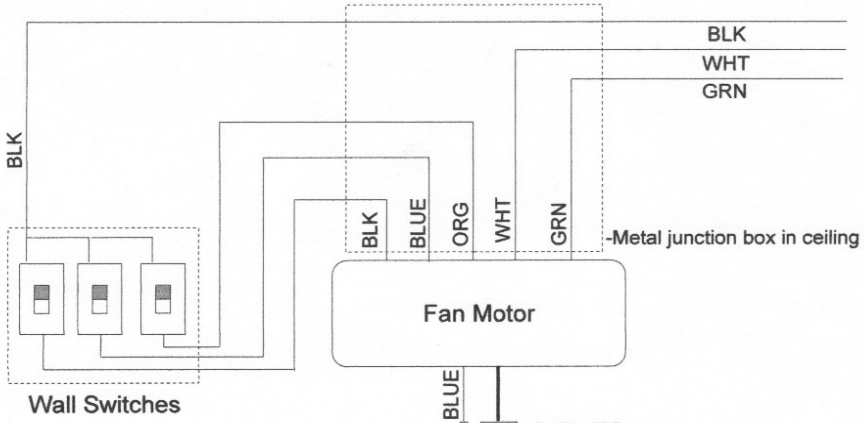

Cut off connector from single BLUE wire from Fan and connect it to WHT wire marked "for Light" in Switch Housing

Connect WHT wire from light kit to same WHT wire marked "for Light" in Switch Housing and BLK wire from light kit to BLUE wire marked "for Light" in Switch Housing

***For Power at Wall Switches**
WHT and Ground from Fan connect to WHT and Ground coming from Wall Switches
BLK will be at Wall Switches, not ceiling box

On some models the single blue wire in the switch housing may be white or vice versa

Kiva Lighting
1312 12th St NW Albuquerque, NM 87104
(505) 342 - 9044